SUSTAINABLE [URBAN] DEVELOPMENT

www.SustainableUrbanDevelopment.org
Laura@SustainableUrbanDevelopment.org
Laura Thornton

How-To-Guide for the Aspiring Urban Micro-Agricultural Entrepreneur

NORTHEAST SARE
Sustainable Agriculture Research & Education

FUNDING FOR THE WORK HERE WAS PROVIDED BY THE USDA SUSTAINABLE AGRICULTURE RESEARCH & EDUCATION PROGRAM

Sustainable Urban Development, Inc had the privilege to receive a SARE Community Research and Education Grant this year to create this *How-To-Guide for the Aspiring Urban Micro-Agricultural Entrepreneur*, focusing on entrepreneurs in West Philadelphia. Without the support of SARE and others involved with Sustainable Urban Development, this course along with the guide would not have been possible. The following guide is a suggestion complied from the help of many people to lead entrepreneurial urban farmers towards the best practices for a profitable and fruitful farm. A lot of energy and thought went into this first edition. I want to give a special thanks to those who have helped us through this project, for without their hearts and their energy, this would not have been possible.

Candice Huber, Northeast SARE Program Associate – for her guidance, patience and flexibility with our project;

Lee Hendrickson, Northeast SARE Financial Coordinator – for her financial assistance and swiftness;

Anna Hargrove – Community Outreach Organizer, for being the liaison between the community and Sustainable Urban Development and our biggest cheer leader;

Melvin Vincent – Co-teacher and farming expert, for always being there to teach me how to farm along the way and help our plants grow;

Amy Laura Cahn – Attorney/Skadden Fellow, Garden Justice Legal Initiative at Public Interest Law Center of Philadelphia, for her guidance and assistance towards reclaiming vacant lots in Philadelphia;

Jim Thornton – Program Manager and co-teacher, for being the best dad in the entire world and my guiding star;

Cheryl Thornton – Mom, for always putting up with our urban farming babble and antics at dinner;

Michael Ruben- Media Coordinator, for always being there for our organization in all matters Media;

Alexandra Moller - Marketing Coordinator, for being with us from the beginning to make Sustainable Urban Development a known organization in the city of Philadelphia;

David Hewitt – Consultant, for his willingness to meet with me at anytime;

Carl Crozier – Professors & Extension Specialist at North Carolina State University, for allowing us to use his wonderful document on Soil contaminants in urban gardens;

The Penn State Extension – for the accessible soil testing they provide for Philadelphia and the surrounding areas at an affordable price.

And a special thank you to the Community of Haddington – for being such an amazing community for showing me the way, allowing me into their lives, and healing each other through urban farming.

Laura Thornton

Table of Contents

Urban Farming Through Raised Bed Gardening 1

How to Build and Install Raised Garden Beds 2

Get Your Soil Tested! 5

Soil Facts *Minimizing Risks of Soil Contaminants in Urban Gardens* 6

Growing and Selling Food in Philadelphia (Amy Laura Cahn) 13

Urban Farming Business Planning 17

Making it Legal – *Register and apply for all of the following* 19

Insurance for Urban Farmers 21

Marketing your Produce 22

Urban Farming Through Raised Bed Gardening

Advantages –

Reduces soil compaction – plant roots need air, typical gardening you can't avoid stepping on the soil, this way you are gardening from the pathways.

Plants can be spaced a little closer together, because you don not need places to step, thus producing higher yields.

It reduces weeding because you are using soil from an outside source that is healthy and weed-free.

They drain away excess moisture – helps plants breathe.

Soil conditions can be controlled more efficiently in raised beds – definitely the answer when top soil is thin.

You are able to control water, fertilizer, compost, mulch, etc. because they only need to be applied to the beds.

Studies have shown raised beds produce 1.4-2 times more veggies per sq foot.

Raised beds bring you physically closer to your garden.

More comfort from the garden path – less bend to pull weeds.

Brings more order to the garden

Raised beds warm up sooner in the spring and remain productive in the fall.

Problems?

Raised bed gardens are not entirely perfect.

They can be difficult to dissemble and ressemble.

Cedar is the best wood to use.

They can be very expensive in the short-term, ie. Purchasing screws, nails, wood, etc.

Drips & Irrigation Systems –

Less time watering and actually use less water, more efficient by only saturating the root zone.

It reduces evaporation.

Weed growth is reduced because areas b/w plans are not irrigated.

It's economical and fairly inexpensive.

If you want to spend the extra money, and have access to water 24/7, you can use a timer.

Square Foot Gardening –

Recommend Square Foot Gardening, written by Mel Bartholomew. It is a systematic way of gardening so that you are producing the greatest amount of produce per square foot

It's an easy book to order on amazon or get at the book store. I really recommend getting it.

You will be using only 20% of the space you would in conventional row gardening

Think outside the box- literally, try growing plants up that grow on vines such as zucchini, cucumbers! This will save you space!

Examples
4 heads of lettuce per square foot; 1 tomato plant per 2 feet, it gives every scenario for growing all types of produce.

It will also help you plan when to start seeds, etc.

How to Build and Install RAISED GARDEN BEDS

HERE ARE TIPS ON PLANNING, BUILDING, PROTECTING AND IRRIGATING RAISED BED GARDENS.

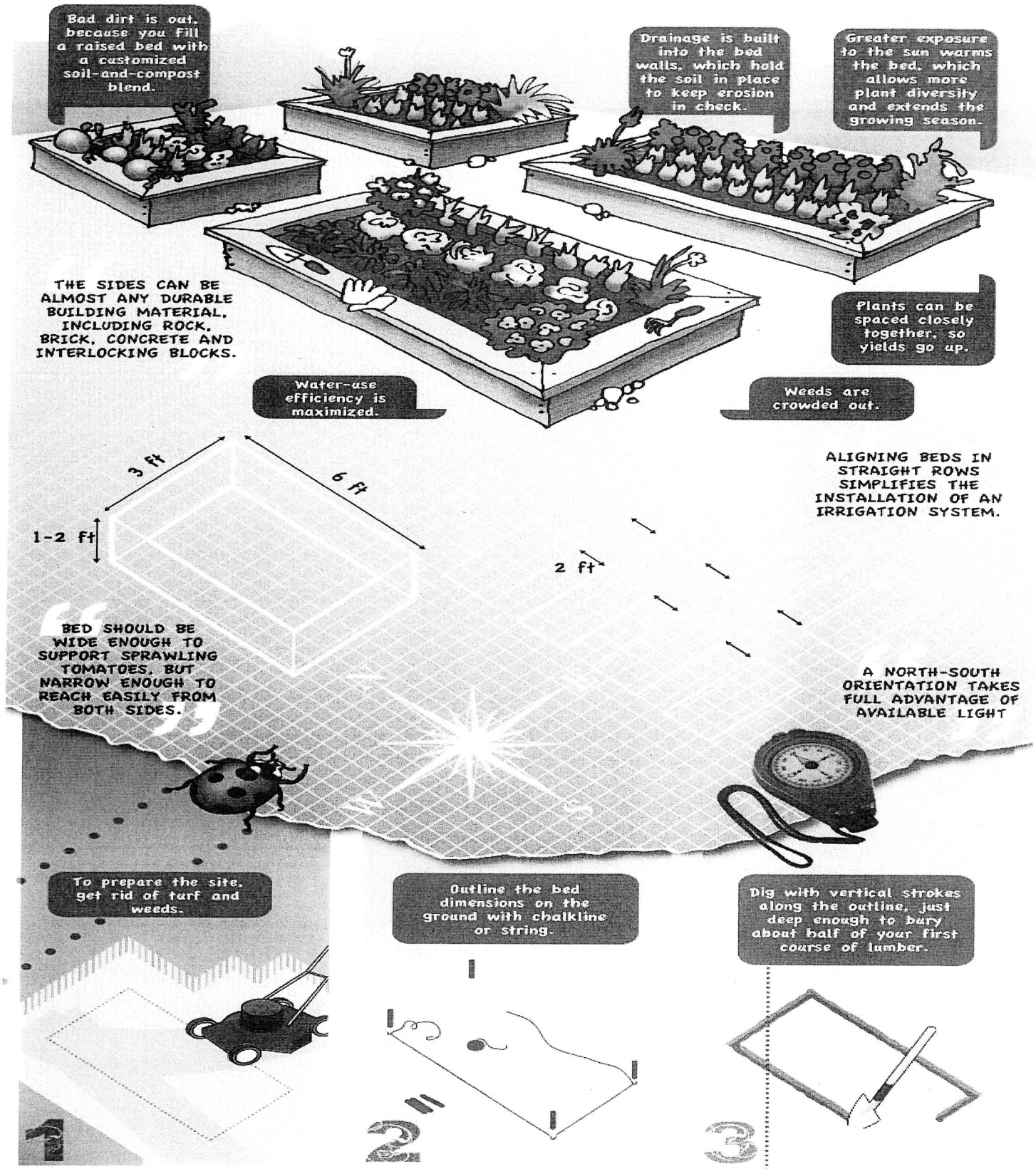

Put down a layer of weed-suppressing landscape fabric that extends to the outer edge of the wooden frame.

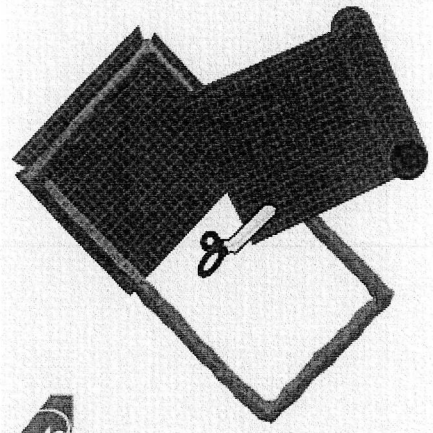

4

Build each wall separately.

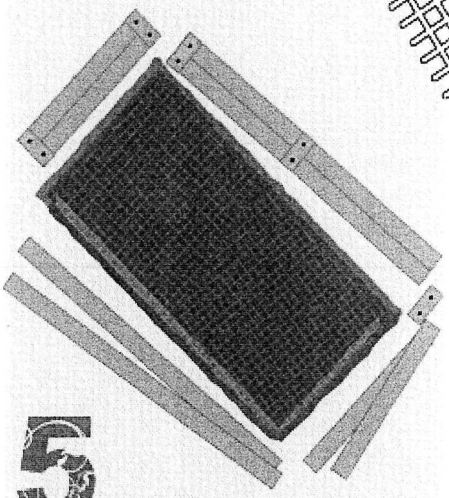

5

You can prevent the "bathtub effect" by digging a few inches deeper and putting a layer of coarse stone or pea gravel in the excavation.

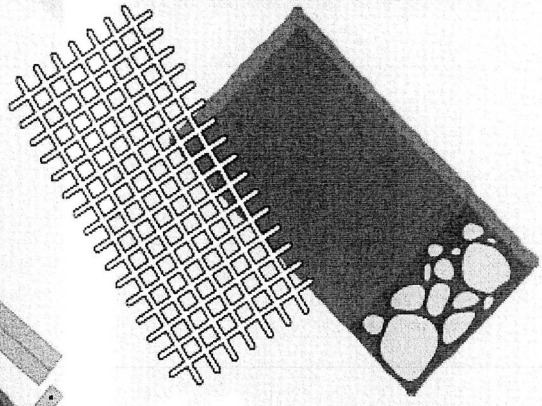

TO KEEP OUT BURROWING PESTS I ALWAYS RECOMMEND A BOTTOM LAYER OF HARDWARE CLOTH.

Then fasten them together and put the bed into position.

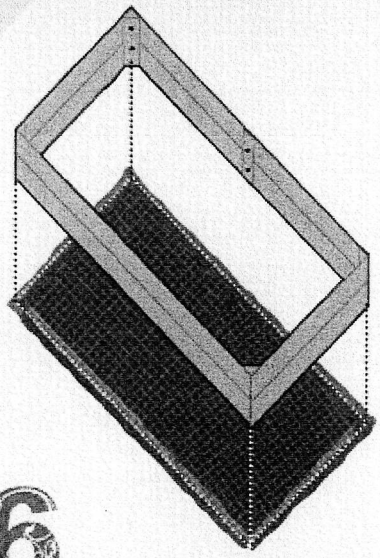

6

A cap railing that runs around the top of the bed ties everything together.

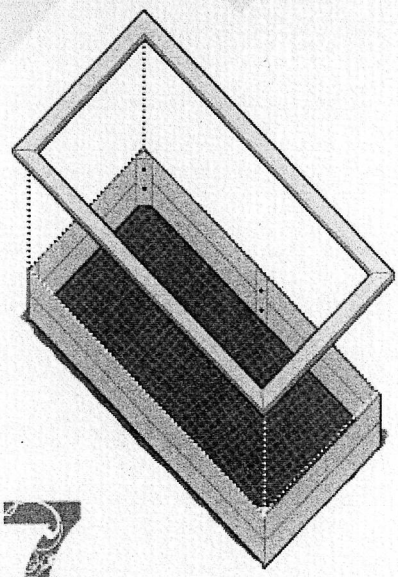

7

Use galvanized pipe straps to mount 1-in. PVC pipe inside the bed walls. Cut 1/2-in. flexible PVC tubing twice as long as the beds' width. Bend it, mount it and clip a cover in place.

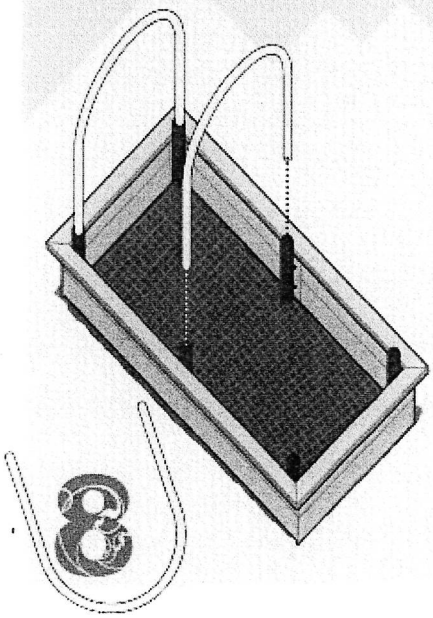

8

A simple framework of hoops and a lightweight cover can extend your growing season in cool areas, conserve moisture in dry areas and protect plants from birds or insects.

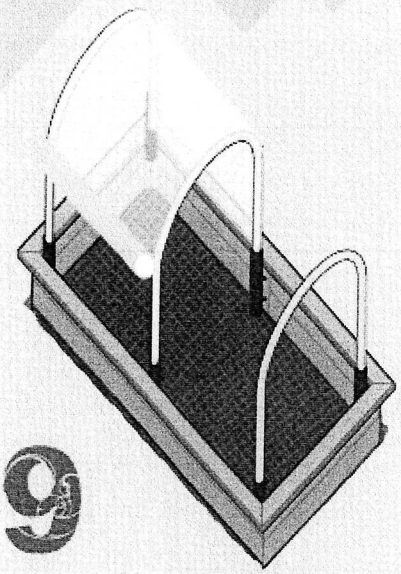

9

BUT BE CAREFUL NOT TO BAKE YOUR PLANTS ON WARMER DAYS

copyright
http://www.raisedgardenbedshowto.com

raisedgardenbedshowto.com

10

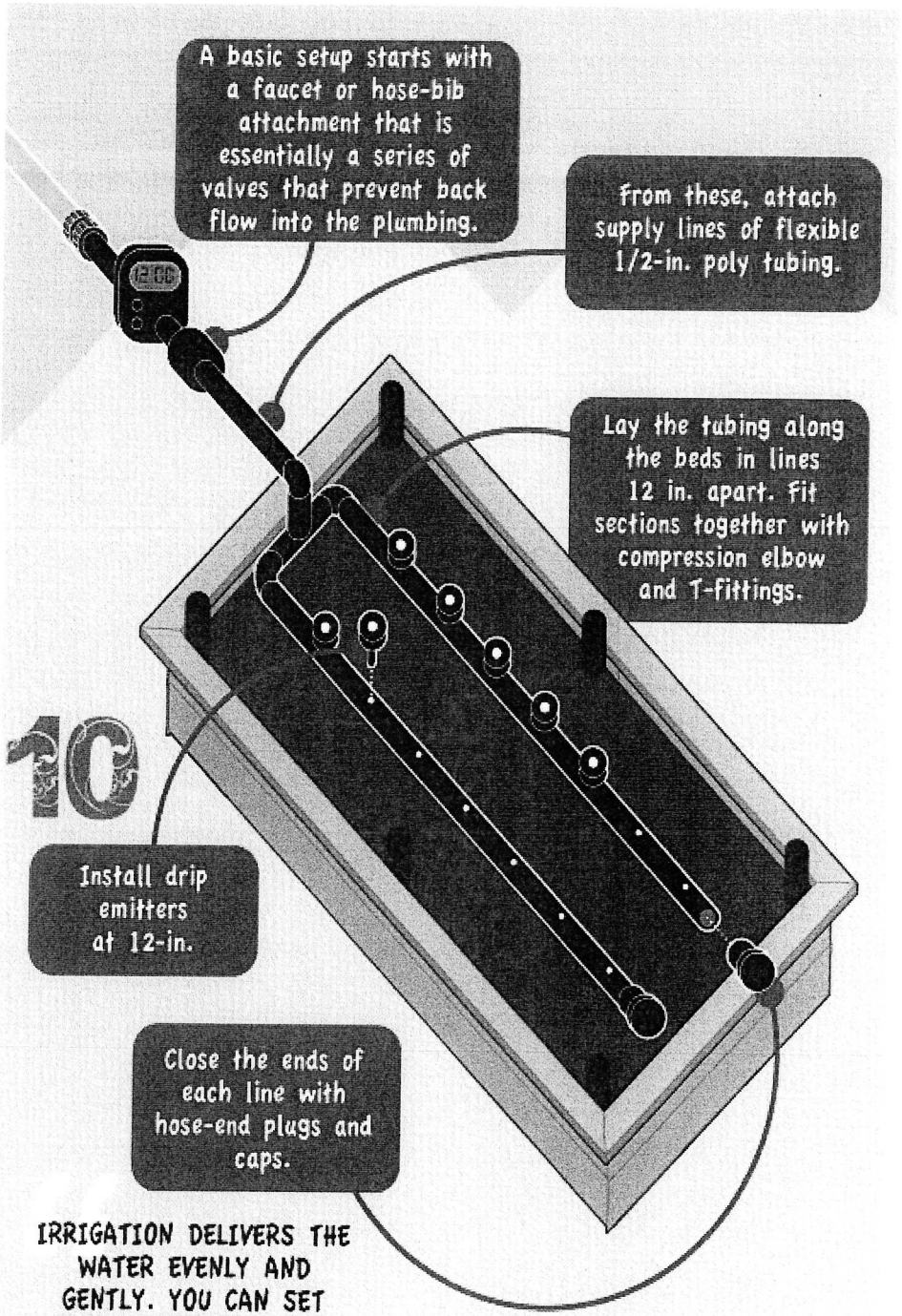

IRRIGATION DELIVERS THE WATER EVENLY AND GENTLY. YOU CAN SET YOUR TIMER TO WATER EARLY IN THE MORNING-LESS WILL EVAPORATE, AND YOU RESIST DISEASE.

GET YOUR SOIL TESTED!

A soil test offers a road map telling what your soil needs to produce strong healthy plants, trees, flowers, vegetables, and lawns. The basic test is for fertility of the soil and measures the amount of potassium, calcium, phosphorous, and magnesium, in the soil, as well as the pH level of the soil. The report includes research-based recommendations for the type and amount of nutrients, if needed, to adjust your soil for the optimal growth of your specific garden.

Thanks to Penn State and the Penn State Extension, soil test kits are available from the Philadelphia County Extension office in Center City Philadelphia. The test kits cost $10 each and include directions for taking the sample and paperwork for the report, a sample bag and a mailer. The actual soil testing is done at the Agricultural Analytical Services lab at the main Penn State campus in University Park.

You can go to the office to pick up a kit or send a check made out to PSU and they will have the kit(s) mailed to you.

The office is located at:

Penn State Extension

2 Penn Center Plaza, Suite 200

Philadelphia, PA 19102

Or call 215-471-2200 Ext 100

Information borrowed from http://extension.psu.edu/philadelphia/programs/master-gardener/horticulture-hot-line/soil-annd-water-testing-information

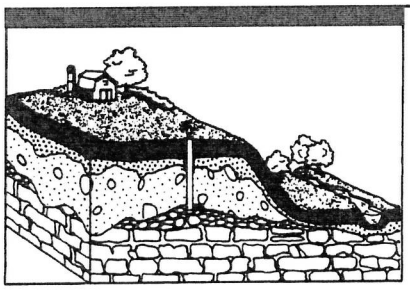

SoilFacts

Minimizing Risks of Soil Contaminants in Urban Gardens

Gardening in urban areas is increasingly popular in North Carolina. Growing food locally (which requires less energy for packaging, transit, and storage), connecting to nature at your doorstep, engaging children in agriculture, and controlling the amount and types of pesticides and fertilizers applied to your food are among the many wonderful reasons to garden in the city. But urban gardening poses potential risks. Before planting, city gardeners must evaluate how a prospective site was previously used, to identify potential safety hazards—including chemical contaminants—in the soil.

This publication alerts prospective gardeners to some of the most common contaminants in urban soils, such as lead and other toxic metals, solvents, pesticides, and total petroleum hydrocarbons. Readers will learn how to minimize potential risks to gardeners and to those who consume garden produce. The document includes information regarding site characterization, common contaminants, soil testing, interpretation of results, and strategies for reducing exposure risks.

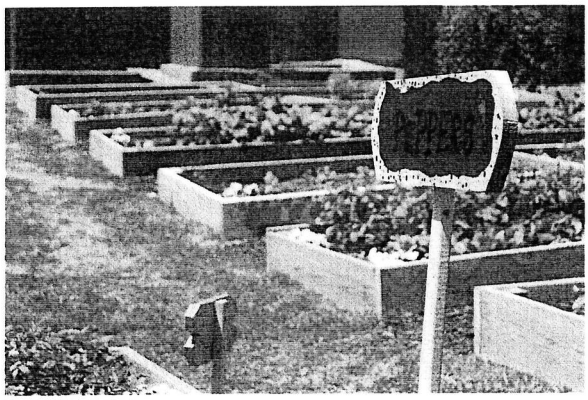

To ensure quality site assessment and analyses, it may be necessary to engage trained professionals. Links to certified professional soil scientists, environmental consultants, and laboratories are provided.

Exposure routes to soil contaminants from urban gardens

Gardeners, garden visitors, neighbors, and animals (including pets, wildlife, and aquatic organisms) can each be exposed to soil contaminants in a variety of ways including:

- Eating soil (including soil adhering to fruits and vegetables)
- Breathing volatiles and dusts
- Absorbing contaminants through skin
- Eating fruits and vegetables that have absorbed contaminants

NC State University
A&T State University
COOPERATIVE EXTENSION
Empowering People • Providing Solutions

Specific exposure routes to contaminants in soils vary based on the particular contaminant, site characteristics, and management practices.

Site characteristics that indicate potential soil contamination

Take a careful look at the history of land use before selecting a site to garden. Evaluate not only the actual plot to be developed but the surrounding lots as well. Start with city records available online or at city hall. They will help you identify the property class, zoning information, and current and previous owners. Long-time neighbors can be valuable sources of information. If the history is questionable, check with local and state agencies to see if an environmental evaluation has been conducted or if the property is listed in the N.C. Department of Environment and Natural Resources Division of Waste Management Brownfields Program Map Viewer (http://portal.ncdenr.org/web/wm/bf/map).

Sites of special concern include those currently or formerly associated with land uses as described below and in Table 1.

- Manufacturing and industrial sites, abandoned railroad lots, dry cleaners, and gas stations may have risks associated with chemical storage, leakage, and discharge into the environment.
- Landfills, junkyards, and waste disposal sites may have inorganic and organic contaminants that have leached into soils.
- Highway corridors, parking lots, or heavily trafficked areas are commonly associated with high lead levels from vehicle emissions.
- Household sites may have substantial lead deposits from older paints and plumbing fixtures.
- Former farmland may have built-up concentrations of inorganic and organic contaminants from fertilizers and pesticides due to excessive application or spills in storage and mixing areas. Otherwise, cropland acreage is generally immediately suitable for gardening applications.

Testing the soil

Documenting the actual site contaminant levels requires appropriate soil sampling, laboratory analysis, and data interpretation. It may be difficult to adequately

Table 1. Potential Issues Associated with Different Previous Land Uses

	Potential Problems					
Type of Site	Lead	Other Inorganic Pollutants[1]	Organic Pollutants[2]	Compacted Soil	No Topsoil	Glass, Misc. Litter
Near coal-fired plant		X				
Highway corridor	X	X				
House demolition	X	X		X	X	X
Industrial site	X	X	X	X	X	X
Parking lot	X	X		X	X	X
Farmland[3]		X	X	X		
Storage lot[4]	X	X	X	X	X	X
Vacant urban lot[4]						X

[1] Different metals are likely to result from specific activities or sources, i.e. paint, galvanized metal, pesticides, wood preservatives, etc. Inorganic pollutants like nitrates and trace elements are naturally found in the environment, but in urban areas they may be concentrated to unsafe levels. Examples include arsenic, barium, cadmium, chromium, lead, mercury, and zinc.

[2] Organic pollutants, including petroleum hydrocarbons, pesticides, solvents, and pharmaceuticals are likely to result from specific activities or sources, i.e. fuel storage, cleaning fluids, etc.

[3] Crop fields generally have few limitations, but storage, loading, and mixing areas may have problems similar to non-agricultural industrial sites and storage or parking lots. Some older fields and orchards may have been treated with arsenic pesticides.

[4] Check how long the lot has been vacant, what its prior uses were, and what has been stored there (for example, road salts).

Note: Sites are highly variable and need to be evaluated on an individual basis. A thorough site analysis is required to determine appropriate soil sampling positions, depths, methods, and analytical needs.

Special Concerns for Children

Children are a target audience for many community gardens, but they are also more vulnerable to contaminants for several reasons:

- They love playing in the dirt.
- When they put fingers, sticks, or even soil in their mouths, they directly consume more soil contaminants.
- Being closer to the ground means they inhale more dust and volatile compounds in the soil.
- Their bodies are rapidly growing and developing, so they have lower tolerances for many contaminants.

characterize a site without hiring a consultant to direct the process. Sources for certified professional consultants who can help assess soil contaminant levels are provided at the end of this document.

Tables 1 and 2 will help you select the appropriate laboratory analyses by identifying which contaminants may be present in the soil and thus which tests are needed.

• If there are **no contaminant** issues and soil sampling is for routine liming and soil fertility assessment only, North Carolina soil samples can be submitted to the NCDA&CS Agronomic Division laboratory for analysis and recommendations. This routine analysis includes copper and zinc, as they are also plant nutrients. The lab is capable of analyzing for other heavy metals but provides this service only to state-regulated sites.

• If **inorganic contaminants** are suspected, a typical analysis may also determine the levels of lead, zinc, mercury, cadmium, arsenic, barium, chromium, and selenium.

• If **organic contaminants** are suspected, analyses could determine levels of total petroleum hydrocarbons (TPH)—particularly polycyclic aromatic hydrocarbons (PAH)—solvents such as trichloroethylene and perchloroethylene (TCE, PCE/PERC), pesticides (e.g. atrazine, carbaryl), dioxin, and bisphenol A(BPA).

Select and contact a soils lab ahead of time to identify fees and get specific directions on how samples should be collected and submitted. See the link to North Carolina Soils Labs at the end of this publication. For general directions on how to collect a soil sample, see *A Gardener's Guide to Soil Testing*, http://www.cals.ncsu.edu/agcomm/publications/Ag-614.pdf.

Interpreting the results of the soil test

Some contaminants occur naturally in the soil, while others are introduced by humans. The trace elements most frequently found at unsafe levels in urban soils are lead, arsenic, cadmium,

Table 2. Common Sources of Contamination

Source	Contaminant(s)
Burning wastes	Dioxins, PAHs[1]
Coal ash	Arsenic, cadmium, lead, mercury, selenium, other trace elements
Commercial/industrial Site	Lead, other trace elements, PAHs, petroleum products, solvents
High traffic areas	Lead, PAHs, zinc
Manure, dairy lots	Copper, zinc
Paint (prior to1978)	Lead, barium, mercury
Pesticides	Arsenic, chlordane and other chlorinated pesticides, lead, mercury (historical use)
Petroleum spills/emissions	Benzene, lead, PAHs, toluene, xylene
Plumbing fixtures	Lead
Sewage sludge	Cadmium, lead, POPs[2], zinc
Treated lumber (prior to 2002)	Arsenic, chromium

[1] PAHs = polycyclic aromatic hydrocarbons

[2] POPs = persistent organic pollutants, a generalized grouping of organic compounds resistant to environmental degradation.

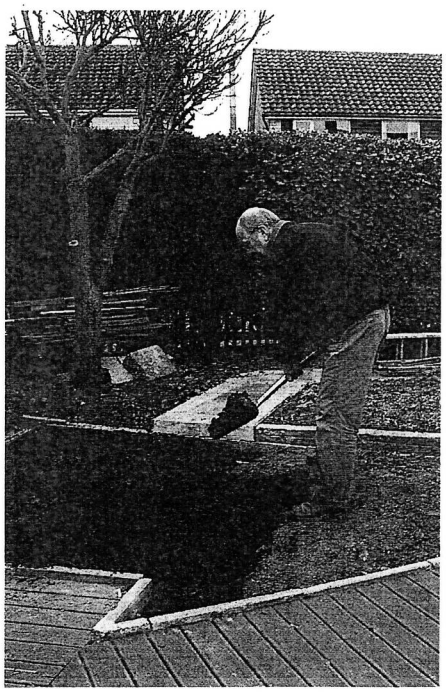

Table 3a. Median Soil Concentrations, Thresholds for Concern, and Management Recommendations for Selected Trace Elements in Urban Soils

Trace Elements					
Contaminant Chemical (abbrev.)		**Median and Range of Soil Concentrations (mg/kg)[1]**	**Remediation Goal (mg/kg)[2]**	**Common Sources**	**Management Notes**
Arsenic	(As)	7.2; <0.1–97	4.4	Lumber treated prior to 2003; pesticides; manure; coal ash	High concentrations, above remediation goals, found naturally
Barium	(Ba)	580; 10–5,000	3000	Paint, brick, glass, tile production; medical diagnostics	Less plant uptake at high pH (>6.5)
Cadmium	(Cd)	0.35; 0.01–2	14	Biosolids; phosphate fertilizers; coal burning	Less plant uptake at high pH (>6.5)
Chromium	(Cr)	54; 1–2000	24000 (Cr[III]); 0.29 (Cr[IV])[3]	Wood preservatives; consumer products	
Lead	(Pb)	19; <10–700	0.0012–400[3]	Formerly used in gasoline, paint, and plumbing fixtures; gasoline emissions; paint chips; used batteries; biosolids; coal ash	Less plant uptake at high pH (>6.5)
Mercury	(Hg)	0.09; <0.01–4.6	0.98–4.7[3]	Paint; fungicides; coal-fired power plant emissions; used batteries	
Selenium	(Se)	0.39; <0.1–4.3	7.8	Coal ash	
Zinc	(Zn)	60; <5–2900	4.6–4600[3]	Biosolids; manure	Less plant uptake at high pH (>6.5)

Note: Only *select* contaminant elements are included. Selection of contaminants for testing should be determined based on site history. It is likely that all contaminants listed in Tables 3a and 3b need not be analyzed, but it is also possible that additional contaminants not included here should be investigated.

[1] Sparks, DL. 2003. *Environmental Soil Chemistry.* Academic Press, San Diego, CA.

[2] NC Department of Environment and Natural Resources Inactive Hazardous Sites Branch Soil Remediation Goals (SRG) Table: http://portal.ncdenr.org/c/document_library/get_file?uuid=5539ecfb-739f-4345-9459-b514508135f1&groupId=38361.

[3] Soil remediation goal dependent on species or form of contaminant.

chromium, barium, and mercury. PAHs are the biggest concern among organic contaminants. Human activity in urban centers tends to increase the levels of contaminants in the soil. In addition, metals introduced by humans tend to be more readily available and easily absorbed into living systems. At low levels, contaminants may pose no known health risk, but higher levels may lead to acute or chronic health problems. The level considered safe varies by contaminant and by site characteristics. Additionally, individual contaminants may be present in a variety of chemical forms or species, each of which may constitute a different level of risk. A qualified consultant may be useful in determining acceptable levels for a specific site.

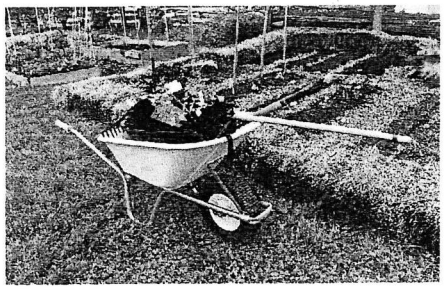

Laboratory reports can be read and interpreted by comparing with published U.S. EPA and North Carolina Department of Environment and Natural Resources guidelines in Tables 3a and 3b. It must be verified that the laboratory is using EPA guidelines or a specific method and type of analysis (extraction) for comparison with published levels.

Keeping Risk in Perspective

It is important to identify and minimize potential risks from soil contaminants, but it is also useful to keep the level of risk in perspective. Smoking 1.4 cigarettes or eating 100 grilled steaks presents the same health risk as a lifetime of exposure to PAHs in soils at the recommended clean-up level (Folstad et al., 2011). Moreover, high concentrations of arsenic and other metals can be found in natural, non-polluted soils, often even above remediation goal levels.

Table 3b. Median Soil Concentrations, Thresholds for Concern, and Management Recommendations for Selected Organic Contaminants in Urban Soils

Organic Contaminants			
Contaminant Chemical (abbrev.)	**Remediation Goal (mg/kg)[1]**	**Common Sources**	**Management Notes**
Atrazine	2.1	Pesticide	Degrades quickly—half-life of 60–100 days
Benzene	1.1	Petroleum	Degrades quickly—presence indicates new spill
Benzopyrene	.015	Vehicle emissions	Common PAH
Carbaryl	1200	Pesticide	Degrades quickly—half-life of 7–28 days
Chlordane (and other chlorinated pesticides)	1.6	Termite control pesticides	
Dioxin (PCDD)	.0000045–.000094[2]	Chemical production; incinerators; smelters; fires and lightning; cement kiln dust	
Polycyclic Aromatic Hydrocarbons (PAH)	.0018–3400[2]	Vehicle emissions; coal tars; asphalt; fires and lightning	The most common contaminants. Used to produce plastics, pesticides, and a myriad of other consumer products. Highest concentrations near roadways.
Tetrachloroethylene, perchloroethylene (PERC, PCE)	0.55	Dry-cleaning product; chemical production; industrial solvents	
Polychlorinated biphenyl (PCB)	1	Coolants; electronics	
Toluene	820	Petroleum; furniture refinishing	Degrades quickly—presence indicates new spill
Trichloroethylene (TCE)	2.8	Industrial solvents; chemical production	
Xylene	130	Petroleum	Degrades quickly—presence indicates new spill

Note: Only *select* contaminants are included. Selection of contaminants for testing should be determined based on site history. It is likely that all contaminants listed in Tables 3a and 3b need not be analyzed, but it is also possible that additional contaminants not included here should be investigated.

[1] NC Department of Environment and Natural Resources Inactive Hazardous Sites Branch Soil Remediation Goals (SRG) Table: http://portal.ncdenr.org/c/document_library/get_file?uuid=5539ecfb-739f-4345-9459-b514508135f1&groupId=383613.

[2] Soil remediation goal dependent on species or form of contaminant.

Strategies for reducing exposure risks

If your analysis reports levels lower than those in Tables 3a and 3b, gardening at that site presents minimal risks. If your soil's levels exceed those in the chart, you should either choose a different site or take precautions to protect gardeners, neighbors, and those who consume produce from the garden. If you decide to garden on the site, use some of the strategies in Table 4 to minimize physical contact with contaminated soil and plant uptake of contaminants. These strategies will help prevent toxins from being absorbed through the skin, breathed in as dust, or consumed.

Lead Contamination in Urban Soils

Lead is the most common contaminant in urban soils, and intake of contaminated soil—through direct ingestion, dust inhalation, or exposure to soil clinging to produce—may pose a serious health risk. Young children and pregnant women are at the greatest risk from lead contamination, as high lead exposure may result in behavioral and learning disabilities. Lead may be derived from a number of pervasive sources, including gasoline emissions, paint chips from older buildings, plumbing pipes, and industrial processes. Lead accumulates where it is deposited and is not easily removed from soil.

Soil testing for lead is essential prior to gardening in an urban setting, and if high levels are found, steps must be taken to minimize lead exposure and prevent health risks.

Table 4. Strategies for Reducing Risk of Exposure to Soil Contaminants

Personal Hygiene • Wear gloves and wash your hands well after working in the garden. • Remove shoes outside to avoid tracking soil into the house. • Prevent children from ingesting soil.	
Food Safety • Remove outer leaves of leafy crops, and wash all produce with a mild detergent to remove dirt and dust. • Peel root crops. • Conduct plant tissue testing to assess the level of contaminants actually in the produce.	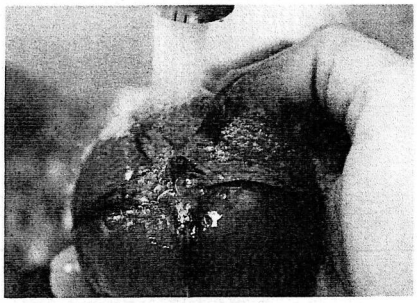
Garden Design • If the contamination is limited to part of the garden, consider modifying the layout to avoid areas with excessive contaminants. Plant those areas with perennial ornamentals to minimize soil disturbance. • When possible, locate gardens away from buildings and heavily traveled roads. • Install raised beds with imported healthy soil. Be sure to allow drainage, but seal off the bottom of the bed so that roots do not penetrate contaminated soil.	
Plant Selection • The edible parts of root crops (carrot, potato, beet, onion) are in direct contact with the soil, so avoid planting these in riskier sites. Peeling reduces some risk. • Shoot and leaf crops (celery, lettuce, broccoli, cabbage) represent an intermediate level of risk. • Fruit-bearing crops (tomato, cucumber, bean, pea) will have lower contaminant concentrations.	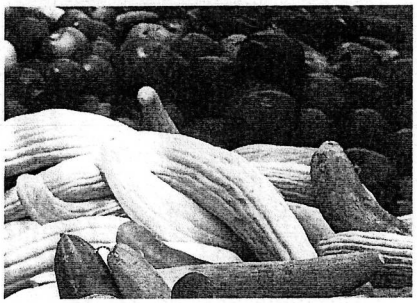
Soil Management • Apply lime based on soil-test recommendations to avoid excess acidity. Some contaminants move more readily into the plant when the pH is low. • Organic matter often binds and renders some contaminants unavailable for plant uptake. Amending soils with good-quality compost may help lower the risk of some contaminants and improve overall soil fertility and physical properties. • If necessary, soil may be decontaminated by physical (excavation, washing, vapor extraction) or biochemical (microbial degradation, phytoremediation) techniques. Consult a professional to determine the optimal remediation strategy appropriate to your site.	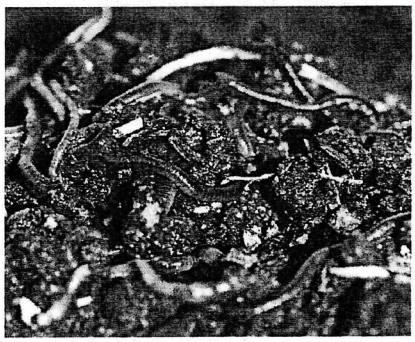

Sources for certified soils professional consulting, sampling, and analyses

Inclusion here does not imply endorsement of any specific service or suggest that alternatives not mentioned are unsuitable.

• Active Licensed Soil Scientists in North Carolina, with designation of area of state providing consultation: http://www.ncblss.org/director.html

• Soil Testing Companies in North Carolina: http://www.manta.com/mb_45_A62DE7N9_34/soil_analysis/north_carolina

• Better Business Bureau Accredited Businesses: http://www.bbb.org/us/bbb-accredited-businesses. Search for "Environmental Consultants," "Testing Labs" and "Soil Testing Companies" by city or zip code.

Additional information

Your local Cooperative Extension Service center is a valuable source of information on lawn and garden care (http://www.ces.ncsu.edu/).

Careful Soil Sampling: http://www.soil.ncsu.edu/publications/Soilfacts/AG-439-30/

North Carolina Department of Agriculture and Consumer Services, Agronomic Division, Soil Testing Laboratory: http://www.ncagr.gov/agronomi/sthome.htm

A Gardener's Guide to Soil Testing: http://www.cals.ncsu.edu/agcomm/publications/Ag-614.pdf

US EPA Soil Screening Guidance: User's Guide. 1996, Publication 9355.4-23. http://www.epa.gov/superfund/health/conmedia/soil/index.htm
http://www.epa.gov/reg3hwmd/risk/human/rb-concentration_table/chemicals/SSG_nonrad_user.pdf
See p. 67 diagram for exposure pathways.

US EPA Urban Agriculture & Improving Local, Sustainable Food Systems: http://www.epa.gov/brownfields/urbanag/index.html

NC STATE UNIVERSITY

References

Brown, S. 2009. "A Primer: Urban Soil Contaminants and Remediation". BioCycle: Advancing Composting, Organics Recycling and Renewable Energy. 10:2009

Folstad, J., S.C. Long and D. Soldat. 2011. *Soil contaminants in community gardens*. Univ. of Wisconsin, Publication A 3905-03. http://learningstore.uwex.edu/Assets/pdfs/A3905-03.pdf

Gasana, J. and A. Chamorro. 2002. "Environmental lead contamination in Miami inner-city area." Journal of Exposure Analysis and Environmental Epidemiology 12, 265-272.

Heinegg, A., P. Maragos, E. Mason, J. Rabinowicz, G. Straccini, and H. Walsh. 2000. "Soil contamination and urban agriculture: A practical guide to soil contamination issues for individuals and groups." Quebec, Canada: McGill University, McGill School of Environment. Accessed September 1, 2009 from http://www.ruaf.org/sites/default/files/guide%20on%20soil%20contamination.pdf.

Peterson, J., M. MacDonell, L. Haroum, F. Monette, R. D. Hildebrand and A. Taboas. 2007. Radiological and Chemical Fact Sheets to Support Health Risk Analyses for Contaminated Areas. Argonne National Laboratory Environmental Science Division and the U. S. Department of Energy.

Rosen, C. J. 2002. "Lead in the Home Garden and Urban Soil Environment." University of Minnesota Extension. WW-02543 http://www.extension.umn.edu/distribution/horticulture/DG2543.html

Shayler, H., M. McBride and E. Harrison. 2009. "Soil Contaminants and Best Practices for Healthy Gardens". Cornell Waste Management Institute. http://cwmi.css.cornell.edu/Soil_Contaminants.pdf.

Shayler, H., M. McBride and E. Harrison. 2009. "Sources and Impacts of Contaminants in Soils." Cornell Waste Management Institute. http://cwmi.css.cornell.edu/sourcesandimpacts.pdf.

Stilwell, D. E., T. M. Rathier, C. L. Musante and J. F. Ranciato. 2008. "Lead and Other Heavy Metals in Community Garden Soils in Connecticut." The Connecticut Agricultural Experiment Station, New Haven, CT Bulletin 1019.

Traunfeld, J. H. and D. L. Clement. 2001. "Lead in Garden Soils". Maryland Cooperative Extension Home & Garden Mimeo # HG18.

Turner, A. H. "Practice Guide #25—Urban Agriculture & Soil Contamination: An Introduction to Urban Gardening." Center for Environmental Policy Management, University of Kentucky http://cepm.louisville.edu/Pubs_WPapers/practice-guides/PG25.pdf

Prepared by

Carl R. Crozier and Matthew Polizotto
Department of Soil Science, North Carolina State University

Lucy Bradley
Department of Horticultural Science, North Carolina State University

Published by
NORTH CAROLINA COOPERATIVE EXTENSION SERVICE

COLLEGE OF
AGRICULTURE & LIFE SCIENCES
ACADEMICS ▲ RESEARCH ▲ EXTENSION

Distributed in furtherance of the acts of Congress of May 8 and June 30, 1914. North Carolina State University and North Carolina A&T State University commit themselves to positive action to secure equal opportunity regardless of race, color, creed, national origin, religion, sex, age, or disability. In addition, the two Universities welcome all persons without regard to sexual orientation. North Carolina State University, North Carolina A&T State University, U.S. Department of Agriculture, and local governments cooperating.

1/12—VB/BW 12-CALS-2854 AGW-439-78

GROWING AND SELLING FOOD IN PHILADELPHIA: SOME BASICS ON ZONING, LICENSING AND PERMITTING

ZONING UPDATE

Cities and regions have widely variable zoning, code, and permit requirements for community gardens and urban farms. While some places seem to lack any kind of restrictions, other areas are infamous for outlawing composting, or other completely natural processes. Whatever the requirements, it helps to be well versed in the expectations specific to your locale, especially as you begin to invest your garden or farm.

Beginning in 2007, Philadelphia embarked on four-year process to completely update and rewrite its zoning code for the first time in 50 years. The new Zoning Code was passed by City Council and becomes effective on August 22, 2012.

The new Zoning Code recognizes Urban Agriculture as a potential land use category in Philadelphia. This is important for two reasons.

- First, for the past fifty years, the zoning code didn't even recognize that people were using land for agriculture. So, it's great news that the zoning board has not only recognized, but, through this recognition, encouraged urban agriculture within Philadelphia.
- Second, and perhaps even more importantly, it makes dealing with the zoning restrictions in a given neighborhood much simpler when the zoning code understands what you are doing.

Philadelphia law recognizes four types of urban agriculture:

- **Community Garden:** a garden managed and maintained by a group of individuals. One or more people can farm it. The main purpose of this type of plot is to grow food for the people who maintain it, not to sell food for profit. Incidental sales are permitted for a small amount of food or non-food crops if you have extra. This type of garden can be located on a roof or within a building.
- **Market or Community-Supported Farm:** a farm that is maintained by an individual or group with the purpose of growing food for sale. This can also be located on a roof or within a building.
- **Horticulture Nurseries or Greenhouses:** propagation and growth of plants in containers or in the ground for wholesale sales and distribution
- **Animal Husbandry:** Feeding, housing, and care of farm animals for private or commercial purposes, subject to applicable Philadelphia Code regulations on farm animals. This is subject to severe restrictions imposed by City Council in 2004, but many residents would like the law changed to allow chickens.
    - Currently, regulations will only allow farm animals on parcels of real property of 3 or more acres.

Produced by the Garden Justice Legal Initiative
Public Interest Law Center of Philadelphia
Assistance from the Philadelphia Dept. of Health, Mayor's Office of Sustainability, City Planning Commission, UPenn Environmental Law Project, Urban Agriculture Legal Resource Library, and Tulane City Center, Dept. of Licensing and Inspection
267-5461306
www.pilcop.org

Zoning Requirements for a Community Gardens

- **Community Gardens are allowed in:**
  - Residential areas, mixed residential/ commercial areas, mixed residential/industrial areas, in institutional areas, entertainment areas, stadiums, and by airports.
- **NOT allowed in:**
  - A port industrial district (a wharf, dock, pier or other areas meant for marine-industrial use), or a district designated for recreational parks or open spaces by the city.

Zoning Requirements for a Market Farms:

- **Market or Community Supported Farms are allowed in:**
  - Most residential areas, most mixed residential/commercial areas, mixed residential/industrial areas, and near airports.
- **Not allowed in:**
  - Center City Commercial Districts (high density commercial and retail districts in the heart of center city), high density industrial districts (places where there is petroleum or chemical processing, storage, etc.), an industrial port (a wharf, dock, pier or other areas meant for marine-industrial use), any area designated for stadiums or entertainment (theatres, casinos, etc.), or districts designated for recreational parks or open spaces by the city.
- **Special exception permit is required for a Market or Community-Supported Farm in:**
  - Residential districts zoned for single-family detached homes.
  - Institutional districts (universities, research facilities, etc.)

Other Requirements for Community Gardens or Market Farms:

- You must make sure your water and fertilizer do not drain into adjacent lots
- Refuse and compost bins must be rodent resistant and located as far as possible from any residences.
- Refuse must be taken out at least once a week.
- Storage areas for tools and other equipment must be enclosed and located as far away as possible from any residences. A zoning and building permit will be required for accessory storage structures.
- No work involving power equipment or generators between sunset and sunrise.
- Any food sold must be sold on the lot where it was grown or at an approved food retail site.
- There are requirements governing when you may erect a fence and what type of fence may be erected in a Community Garden. A zoning permit will be required. Be sure to reference zoning requirements before building a fence.

Produced by the Garden Justice Legal Initiative
Public Interest Law Center of Philadelphia
Assistance from the Philadelphia Dept. of Health, Mayor's Office of Sustainability, City Planning Commission, UPenn Environmental Law Project, Urban Agriculture Legal Resource Library, and Tulane City Center, Dept. of Licensing and Inspection

267-5461306
www.pilcop.org

PHILADELPHIA LAWS AND REGULATIONS FOR GROWING & SELLING FOOD

Commercial Activity License:
The city of Philadelphia requires any group or individual that is not a registered nonprofit to obtain a Commercial Activity License from the Licensing & Inspections Department before beginning sales. You can obtain a CAL for either a lifetime fee of $300, or for one year for $50. To get a BPL, you must fill out a license request form. You can do so on the Internet, or by calling 311 and speaking to a representative at the office of Licensing and Inspections.

- https://business.phila.gov/Pages/BusinessPrivilegeLicense.aspx?
- $300 for a lifetime CAL; $50 for a yearly CAL.

Vendor Licenses, Sidewalks, & Incidental Sales:
Under the zoning code that will take effect in August 2012, community gardening and market farming are allowed in most parts of the city, but you still need to acquire a "use registration permit" from the City if your garden or farm is a new use or a change in the use of a parcel.

- This is a one-time permit, which costs $125.
- You can find more information here https://business.phila.gov/Pages/Zoning.aspx or
- Ask for help from the Department of Licensing and Inspections
  Municipal Services Building
  1401 John F. Kennedy Boulevard ~ Concourse Level
  Call 311 or 215-686-8686

Gardeners are allowed to sell produce (uncut, whole) from their gardens without obtaining any more than a CAL. However, if you want to use the sidewalk or other right-of-way for your sales, you will need to obtain additional licenses from the L&I Department. Similarly, if you want to set up a permanent store for selling food, you will need to contact both L&I and the Health Department.

Farmers Markets:
Currently, the City of Philadelphia maintains a "Farmers Market License" intended for situations where "on designated days and times, growers and producers of horticultural and agricultural products sell those products directly to the public." The City is in the process of revising the requirements of that license, and making determinations about whether or not new small-scale sellers will still be required to obtain said license. If you are interested in selling at a farmers market, there are two good resources in Philadelphia:

- Farm to City (http://www.farmtocity.org/) -- (215) 733-9599
- Food Trust (http://www.thefoodtrust.org/) -- (215) 575-0444

Department of Health/Office of Food Production
The Office of Food Production is not involved with incidental sales of produce from a garden. However, if you want to prepare food (including slicing up produce to provide samples), or if you want to start selling other products, like eggs or products made from your produce, you will need to contact the Office of Food Protection to discuss what licensing or permitting might be required and get help creating a plan. You can call at 215-685-7495 or use walk-in hours at the Office of Food Protection's West Philadelphia location, 321 University Avenue, 2nd Floor, Monday – Thursday 9am to 4pm.

Produced by the Garden Justice Legal Initiative
Public Interest Law Center of Philadelphia
Assistance from the Philadelphia Dept. of Health, Mayor's Office of Sustainability, City Planning Commission, UPenn Environmental Law Project, Urban Agriculture Legal Resource Library, and Tulane City Center, Dept. of Licensing and Inspection
267-5461306
www.pilcop.org

A ROUGH CHECKLIST FOR GARDENERS SEEKING TO COMPLY WITH LOCAL LAWS

- **Are you planning to start a community garden or market farm?**
  - I want to grow food primarily for sale, either as a nonprofit or for profit venture → market farm.
  - I want to create a garden or grow food for family or community use, with occasional sales → community garden.
- **Is your garden or farm in a zoning district that allows your type of urban agriculture?**
  - If no, you can seek a variance. Contact your City Councilperson and ask to speak with the person in charge of zoning issues.
  - If yes, the Planning Commission says that you will still need to get a **"use registration permit."**
- **Are you planning to sell produce (or other products) at your garden or farm?**
  - If no, you don't need to read any further.
  - If yes, read on.
- **Is your venture for profit or nonprofit?**
  - If for profit, the City currently requires that you obtain a Commercial Activity License (CAL).
  - If you are recognized as nonprofit by the IRS, you do not need a CAL, but you need to provide the Department of Revenue with your letter from the IRS.
- **Will the farm stand be located in your garden or on the sidewalk?**
  - Are you growing on City-owned property using an Urban Garden Agreement?
    - Unless you receive special permission from the Vacant Property Review Committee, your UGA likely prohibits you from selling produce directly from your garden. Thus, you may need to sell from the sidewalk.
  - If you are selling on the sidewalk, you will need to check with the Department of Licensing and Inspections about prohibited streets and/or get a sidewalk sales permit.
- **Are you selling only raw, agricultural products that are grown on site?**
  - If yes, you have no need to get a license from the Philadelphia Department of Health's Office of Food Protection.
    - The Office of Food Protection can still inspect your farm stand.
    - To be safe, remember not to sell cut produce or offer samples of your produce and make sure your produce is displayed at least six inches above the ground.
  - If you are selling eggs, baked goods, or anything made with your vegetables or fruit, you should be in touch with the Office of Food Protection for more information.

Produced by the Garden Justice Legal Initiative
Public Interest Law Center of Philadelphia
Assistance from the Philadelphia Dept. of Health, Mayor's Office of Sustainability, City Planning Commission, UPenn Environmental Law Project, Urban Agriculture Legal Resource Library, and Tulane City Center, Dept. of Licensing and Inspection

267-5461306
www.pilcop.org

Urban Farming Business Planning -

Identifying who you are, what your produce is and why you are qualified to succeed; resolve potential problems before they occur; lay out your goals and action plan!

Business Plan –

busi·ness·plan [**biz**-nis-plan] *Noun.*

1. A detail description setting out the objectives of a business, the strategy and tactics planned to achieve them, and the expected profits, usually over a period of three to ten years.

2. A business plan helps define your reasons for entering the food business, the type of enterprise you want to run, and the goals you want to reach. Your plan will lay out detailed, research-supported plans for how you will reach these goals and succeed in the marketplace.

Starting a Business in PA-

- The Entrepreneurship Guide - Totally free, and a great resource online. http://www.newpa.com/webfm_send/1439
- Expert Assistance - USE resources available to you!
  - Wharton Small Business Development Center - Vance Hall, 3733 Spruce Street, Philadelphia, PA 19104 http://whartonsbdc.wharton.upenn.edu
  - Center for Entrepreneurial Assistance – Government Agency. Assist with state-related and general business questions, such as registration and licensing requirements. 1-800-280-3801
  - PA Open For Business - Great help with exploring financial options, download important forms to start a business and electronically register your business. http://www.paopen4business.state.pa.us/portal/server.pt/community/online_business_registration/8778
- Getting Your Employer ID Number – SS-4 Form, ITS FREE
  - http://www.irs.gov/pub/irs-pdf/fss4.pdf
  - Or apply online, http://www.irs.gov/businesses/small/article/0,,id=102767,00.html
- Getting Funded!
  - This is 16 pages of resources, in Pennsylvania, that can help you with funding, including grants! http://www.newpa.com/sites/default/files/uploads/SmallBusinessFinancingAssistance_HelpGuide_JUNE2010_1.pdf

Finding Help! Wharton Small Business Development Center - Vance Hall, 3733 Spruce Street, Philadelphia, PA 19104-6301 http://whartonsbdc.wharton.upenn.edu

Getting Started-

- Writing your plan down on paper allows you to
  - Identify who you are, what yourproduct is and why you are qualified to succeed;
  - Lay out your goals and action plans for making your business profitable;
  - Identify and resolve potential problems before they occur; and
  - Target areas where financing is needed and locate funding sources
- This will create a visible version of your dream
- Need to build a team of support – advisors, networkers, consultants, etc. Most agencies will want to see a plan before they even speak with you

Components of a Successful Business Plan: No single correct way to write a business plan, but here are a few tips-

- Executive Summary - A concise one-page overview of the plan

- General Description of the business - Where are you now? Where are you going? What stage of development is your business in and what is your general plan for growth?

- Personal and Business Mission Statements – What are your qualifications for success? Whya are you in business?

- Business Goals and Objectives – What is your timeline for what you want to accomplish?

- Background Information – What is the current and future industry trends? How does your business fit into that industry?

- Ownership, Government Regulations and Contracts – How will your business be structured? Do any government regulations apply? What contracts and leases do you intend to enter? What kind of insurance coverage is needed?

- Management Issues – Who will do what? How will you manage employees? How will you manage risk? How will you face the unexpected?

- Succession and Estate Plans – Who will take over the business if you are no longer there to handle it? Under what circumstances would you hand out the business to someone else?

- Marketing Plan - What features and benefits does your product offer (see tips on Marketing Hand Out)

- Financial Plan – What are your expected Expenses and how will you pay them? What is expected Profitability of your venture? How will you create a budget based on financial needs and expected income? What is your current personal financial situation?

Making it Legal – Register and Apply for all of the following to make your urban farm legal!

Local Requirements?

Contact the city office to determine which local regulations are applicable to new businesses in your area. http://www.business.phila.gov is a great website to help customize your business needs.

Zoning –

Market or Community Supported Farms are allowed in most residential areas, most mixed residential/commercial areas, mixed residential/industrial areas and near airports. They are NOT allowed in Center City Commercial Districts, high density industrial districts, industrial ports, any area designed for stadiums or entertainment, or districts designated for recreational parks or open spaces by the city.

Special Exception permit is required for Market or Community Supported Farms in residential distracts zoned for single-family detached homes and institutional distracts (such as universities or research facilities).

Philadelphia Laws and Regulations for Growing and Selling Food

Prerequisites-

Federal Employer Identification Number, or if you are a sole proprietorship, a social security number. To apply for your EIN visit http://www.irs.gov/businesses/small/article/0,,id=98350,00.html

A City of Philadelphia Tax Account Number. To apply for this tax account number visit https://ework.phila.gov/revenue//default.asp

Licensing –

Commercial Activity License is required by any group or individual that is not a registered Non Profit to obtain a Commercial Activity License from the License & Inspections Department before beginning sales. Two ways to obtain it - ***$300 lifetime fee, or for one years for $50.*** You must fill out a license request form, either downloading it from the internet or calling 311 and speaking to an L&I representatitve

https://www.business.phila.gov/Pages/BusinessPrivilegeLicense.aspx?

Vendor Licenses, Sidewalks & Incidental Sales In August 2012, community gardening and market farming are allowed in most parts of the city, but you still need to acquire a "use registration permit" from the city. ***$125 will cover a lifetime fee.*** https://business.phila.gov/Pages/Zoning.aspx or visit Dept of L & I – Municipal Services Building, 1401 John F. Kennedy Blvd – concourse level or calling 311 or 215-686-8686.

Farmers Markets

If you wish to organize, manage and operate a farmers' market where growers and produces of horticultural, agricultural, bakes goods or homemade products sell those products directly to the public on days and times in a designated farmer's market, a license is required. This can be obtained at

Department of Licenses and Inspections - License Issuance Unit
1401 John F. Kennedy Boulevard
Concourse Level
Philadelphia, PA 19102

If you are interested in selling at a farmers market, there are two good resources in Philadelphia

- Farm to City (http://www.farmtocity.org)
- Food Trust (http://www.thefoodtrust.org)

Department of Health

The Office of Food Production is not involved with incidental sales of produce from a garden. However, if you want to prepare food (including slicing up produce to provide samples), or if you want to start selling other products, like eggs or products made from your produce, you will need to contact the Office of Food Protection to discuss what licensing or permitting might be required and get help creating a plan. You can call 215-685-7495 or use walk-in hours

Office of Food Protection's West Philadelphia Location
321 University Ave, 2nd floor
Monday-Thursday 9 am to 4pm

*FARMERS ARE ALLOWED TO SELL PRODUCE THAT IS UNCUT, WHOLE FROM THEIR GARDENS WITHOUT OBTAINING ANY MORE THAN A CAL. HOWEVER IF YOU WANT TO USE THE SIDEWALK OR OTHER RIGHT-OF-WAY FOR YOUR SALES, YOU WILL NEED TO OBTAIN ADDITIONAL LICENSES FROM L&I. IF YOU WANT TO SET UP A PERMANENT STORE FOR SELLING FOOD, YOU WILL NEED TO CONTACT BOTH L&I AND THE HEALTH DEPT.

Insurance for Urban Farmers

What type of coverage do you need?

Do not assume that your home owners insurance will cover your home-based food business. Talk to your current insurance agent, it is possible a rider can be added to your policy.

- Contact your insurance agent or broker
- Review the coverage you already have
- Determine what additional insurance is needed, then seek an economical way to purchase what you need.

Most businesses need fire, automobile, liability and worker's compensation- contacting your agent will help assist you in determining any gaps or areas of risk.

Why should you have insurance?

You can be held liable for accidents even if you have done everything reasonable to avoid them. An insurance policy will

- Protect assets you can't afford to lose in a lawsuit, such as business property
- Get a bank loan for your food business
- Ensure that distributors will carry your product
- Qualify you to use shared-use kitchens or other rented facilities

Types of Insurance

Generally, there are two areas of insurance- Property and liability; life and health. Life and Health would include employment benefits that you arrange for yourself and any employees.

To begin, concentrate on liability and property.

Property policy provides insurance on your building (if you have one) and tangible assets. If something were to happen and you needed to file an insurance claim, you will receive cash for the actual value of the loss of the funds needed to repair or replace the item.

Liability Insurance applies when payment will be made to cover court costs, legal fees and interest on judgments, in addition to the actual amounts awarded to the plaintiff at the court, up to the dollar limits of the policy.

Insurance You Need to Consider

LIABILITY – will protect your business if someone suffers bodily injury while are you place of business and sues for damages. The cost is related to the risk of your industry.

PRODUCT LIABILITY – this protects you against claims of injury due to defects in your product. If your product is part of a food borne illness outbreak, has faulty packaging, etc. this insurance will protect you.

BUSINESS PROPERTY – protects company equipment or assets against therft or dmage due to fire, flood, vandalism, or other unfortunate incidents.

WORKER'S COMPENSATION – covers employees who are injured on the job. Only necessary when you have employees, each applicable employee job classification based on the tasks your employees perform will determine annual costs.

Marketing Your Produce

What is your product?
Ask yourself the following questions: Is my product different from those currently on the market? Do I want to offer a new twist? What makes my product better? Is this product something people will eat every day?

Visit some places where products like yours are sold.

Where will you sell it?

Bringing your product to market has many major factors you need to consider. Figure out your options: Farmers market, direct, co-ops, Farm Share, door to door... etc.

Think about the time and energy that goes into each type of market.

Who is your market?

The group of people who are willing to buy what you are selling. Learn about the people in the area you are selling. Many matters will be outside of your control. Timing, cost of market entry, and competition. Calculate your risk.

What will you charge for it?

Price is a very difficult task for many. Charge too much, and no one will buy your product. Charge too little, and you will not be able to sustain your business or turn a profit. Researching your product and the market around you will help you find the right price.

How will you convince future customers to choose your product over others?

So, you have decided how you will sell your product and for what price. The next step is increasing customer awareness to convince your targeted demographic to buy it. Expensive advertising is not ideal for start-up businesses. Word-of-mouth advertising is a great, and inexpensive alternative to building your base of support. It is important to build customer loyalty from a specific group, rather than saturating the entire market. It is important to understand that satisfied customers often have friends who think the same way and this will, in turn, build sales slowly and create a demand.

Packaging can also assist in promoting. Creating a trademark or label that buyers will recognize will be very helpful. Select a design that will attract your market and fit in with your mission.